USER MANUAL

ARIES

Semi-Rotary Machine

TECHNICAL SPECIFICATIONS

!IMPORTANT!

This unit has some parts which are capable of causing serious injury to the end-user including but not limited to, the blades, nip roller, and the rotary cylinders inside the rotary module.

	ARS2xxx
Media Width	up to 350mm
Unwinder Roll Diameter	Up to 500mm
Lamination Roll Diameter	Up to 250mm
Max. Diecutting Width	330mm
Max. Diecutting Length	360mm
Cutting Dies	Flexible steel, from 130mm to 360mm
Max. Finished Label Rewind	400mm
Max. Waste Matrix Rewind	300mm

POWER REQUIREMENTS

ARS2xxx	100-240V~1Kw, 50/60Hz

Environmental functioning and storage requirements

Operating temperature: From 5°C to 35°C.
Storage temperature: From 5°C to 50°C.

COMPRESSED AIR

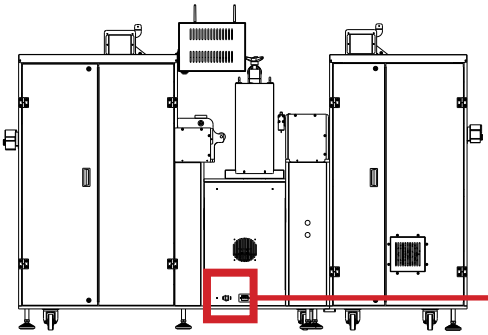

Use only a neutral plastic 10mm-ext/9mm-int connection tube.

Minimum Bar requested: 2Bar

LAYOUT AND SIZE

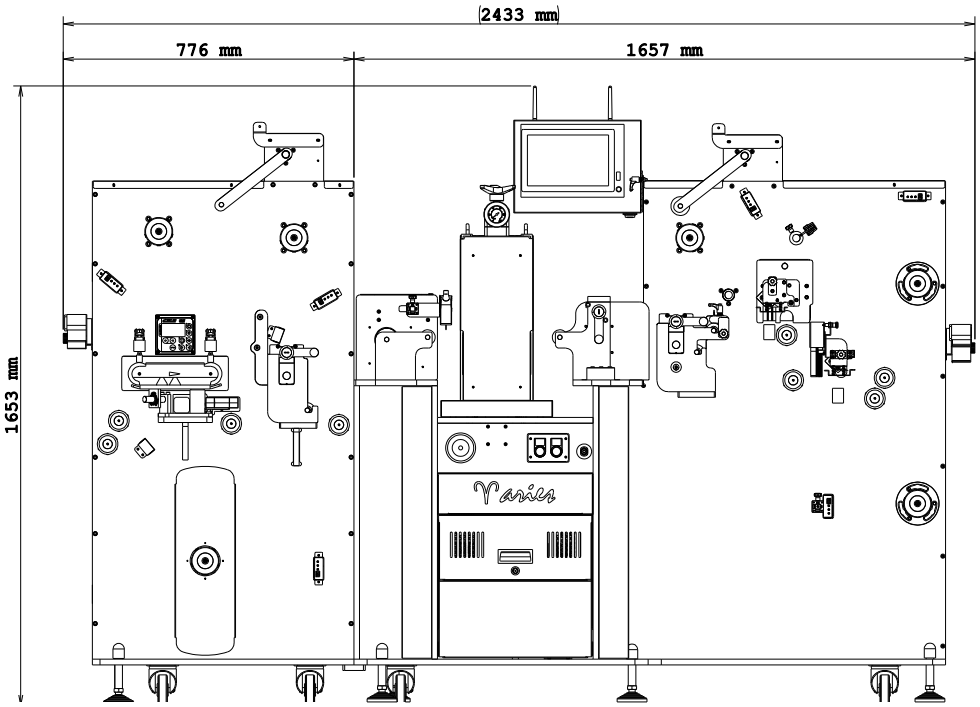

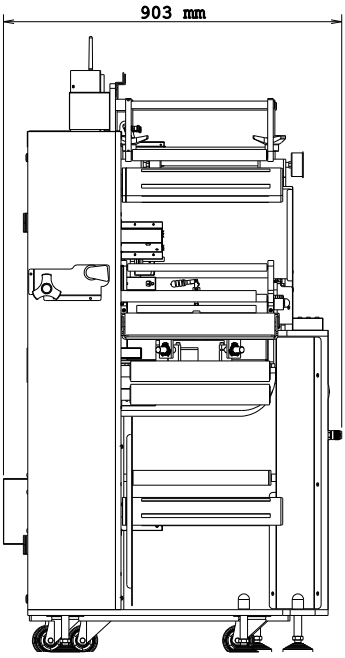

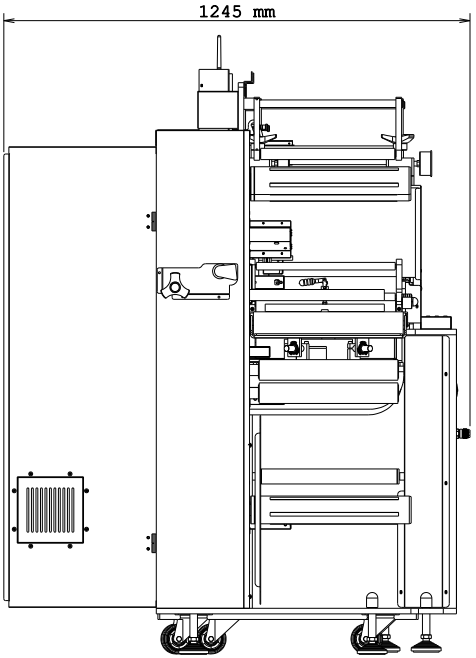

MEDIA PATH

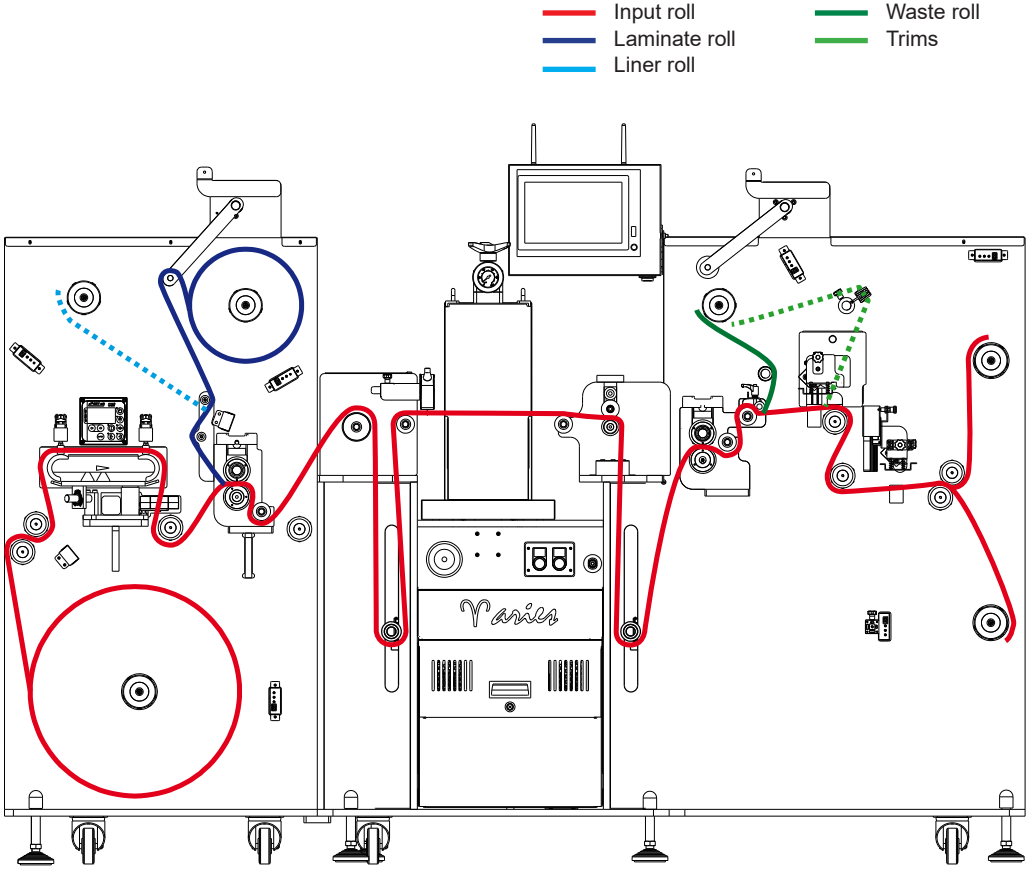
Input roll
Laminate roll
Liner roll
Waste roll
Trims
Varies

INSTALLATION

Insert the two studs (on the rewinder module) into the slots located on the unwinder module. Then secure them together with four allen screws.

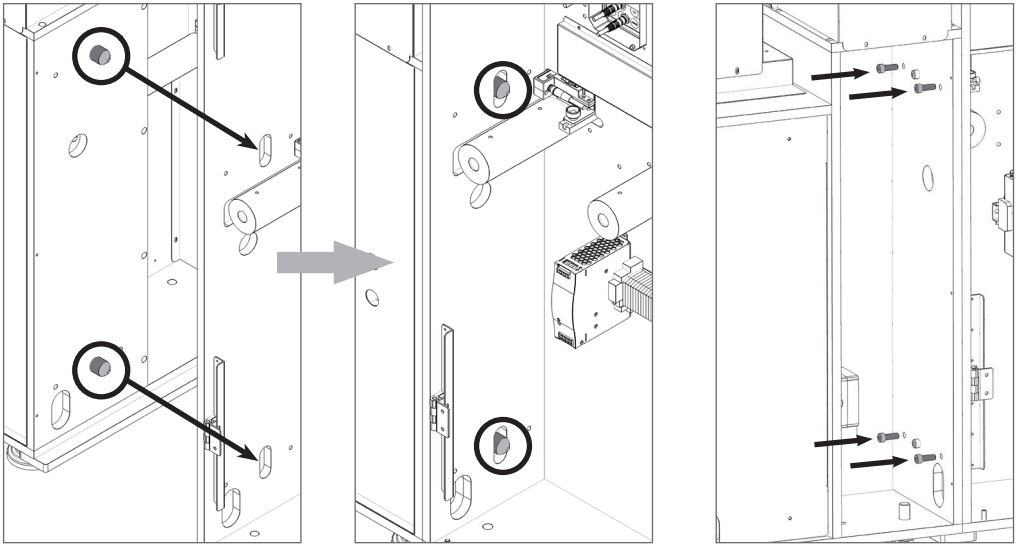

With a wrench, you can raise or lower each foot by turning the bolt left or right. This should assist in leveling the unit.

Clockwise > raises the unit
Counterclockwise > lowers the unit

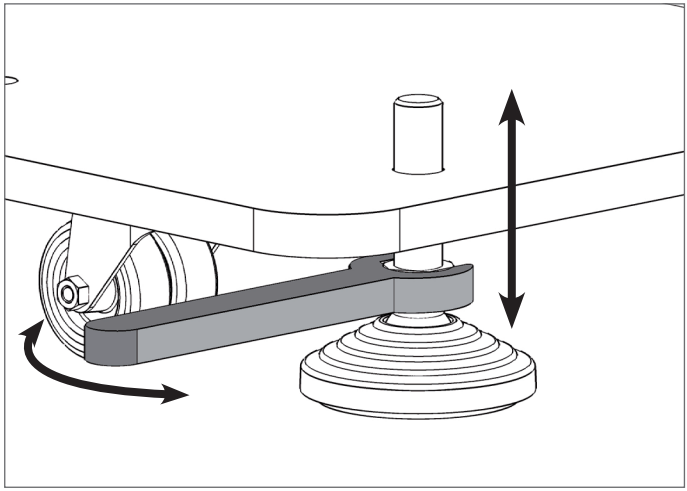

OPERATION STEPS

How to set the silencer

Silencer accessory is used to drastically reduce the noise generated by noisy self-wound lamination application.

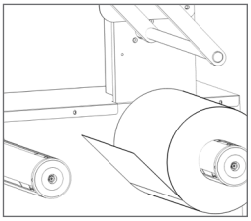

Load and fix the self-wound lamination roll on to the core holder.
Pull the lamination end over the aluminium roller.

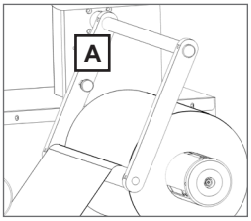

Use knob (A) to unlock the silencer, then setting it down over the lamination roll.

How to load the waste

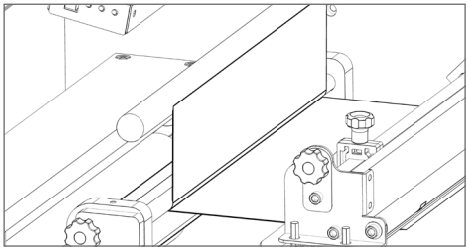

1. Peel off the waste from the liner.

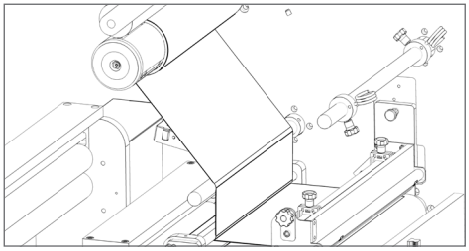

2. Attach the waste to the cardboard core located on the core holder.
Allow the press roller to fall down over the waste roll.

Different modes to remove the waste

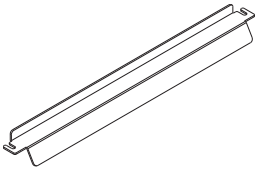

You have two modes to remove waste material from the unit. Using classic roller (the standard use) or using the 60° bar.
This is dependent on the type of materials being used, the type of laminate used, and the shape of the die-cut.

How to install the 60° bar

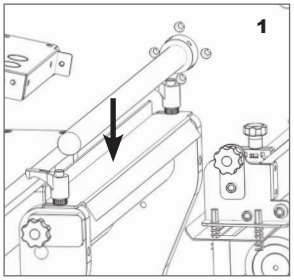

Install the 60° bar with two tighten knobs

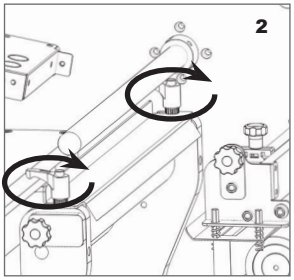

Fix the tighten knobs.

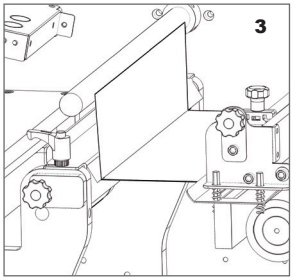

Remove the waste following the standard steps

How to set slitter module

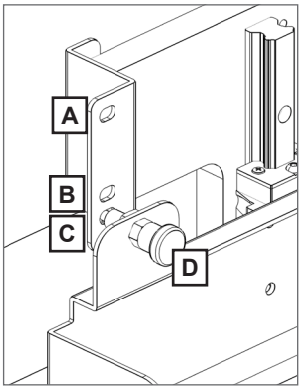

Slitter module has 3 positions:

- Upper position (A), the blades are at its highest to allow for media loading;

- Middle position (B), Blade are slightly lowered and can be moved from right and left to find the desired position where to perform the longitudinal cut. Tighten the screw to fix the blade holder in position;

- Lower position (C), the blades cut through the media.

To lock the module in A,B or C position use the knob (D)

How to use the splice table

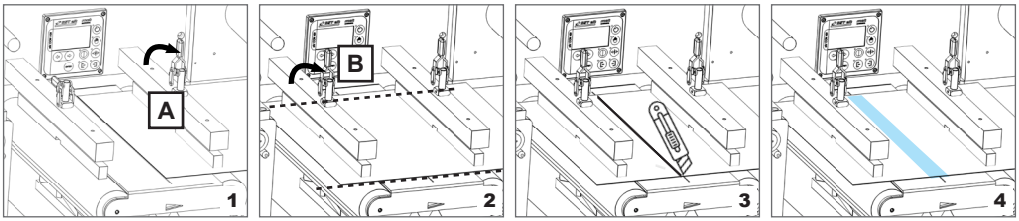

1. Clamp (A) is used to secure the bracket down over the media already loaded through the unit;
2. Load the new media roll onto the unit, then align it with the old media from the last job. Use clamp (B) to secure the bracket down on the new media;
3. Use a cutter to cut the excess media along the lines.
4. Join both media ends together by applying tape above and underneath the ends. Once complete, release both clamps.

How to add or remove a blade holder

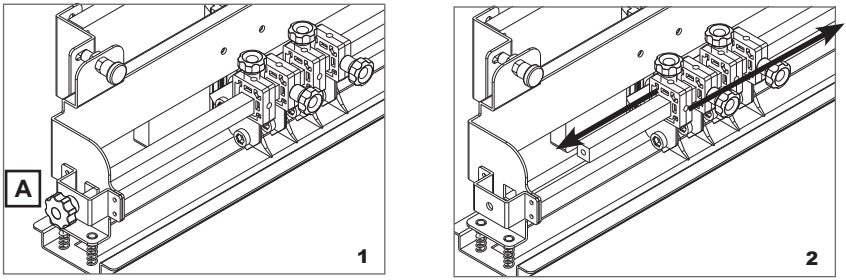

1. Release the knob (A) to remove the supporting iron bar
2. Slide in the additional blade holder or slide out the unnecessary one.
Reinstall the supporting iron bar and tighten the knob.

How to rotate or replace the razor blade

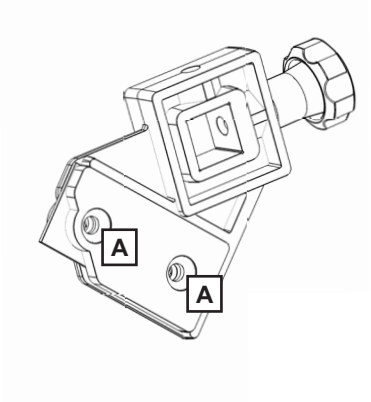

1. Remove the two screws (A), holding the small iron support securing the blade.

2. Rotate or replace the blade.
This razor blade offers four cutting corners. When a cutting corner is worn out, you have the ability to rotate the blade and expose a different cutting corner before having the blade completely replaced.

3. Reinstall the small iron support to screw down the blade in place.

How to cut the external trims

Use the trim removal module to cut the external trims. This will allow you to remove it along with the waste.

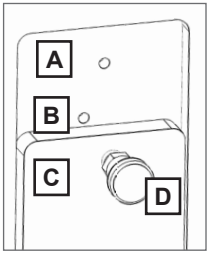

Trims removal module has 3 positions:

Upper position (A), the blades are at it's highest to allow for media loading;

Middle position (B), blade are slightly lowered and can be moved from right and left to find the desired position where to perform the longitudinal cut. Tighten the screw to fix the blade holder in position;

Route the external trims through the springs (C) and secure it to the waste rewinder (D).

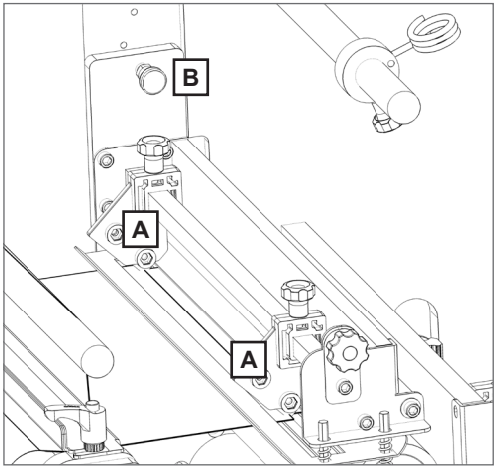

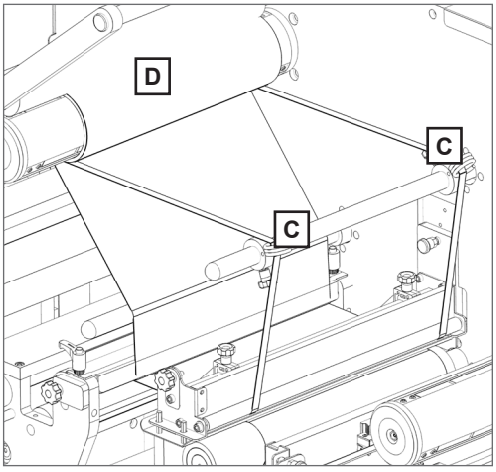

Move the blade holder (A) in the desired position, then use the knob (B) to lock the module in lower position.

Route the external trims oinside the spring (C) and secure it to the waste rewinder (D).

EQUIPMENT

ARS2xxx unit is assembled by two modules that should be leveled when installing them together:

UNWINDER MODULE

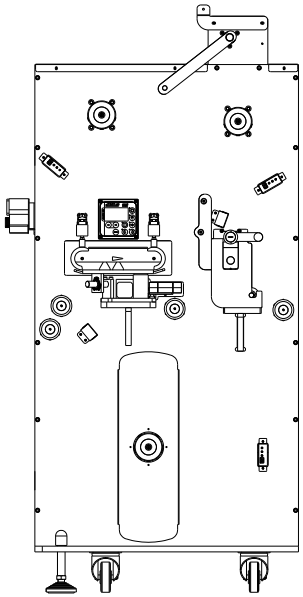

ROTARY & REWINDER MODULE

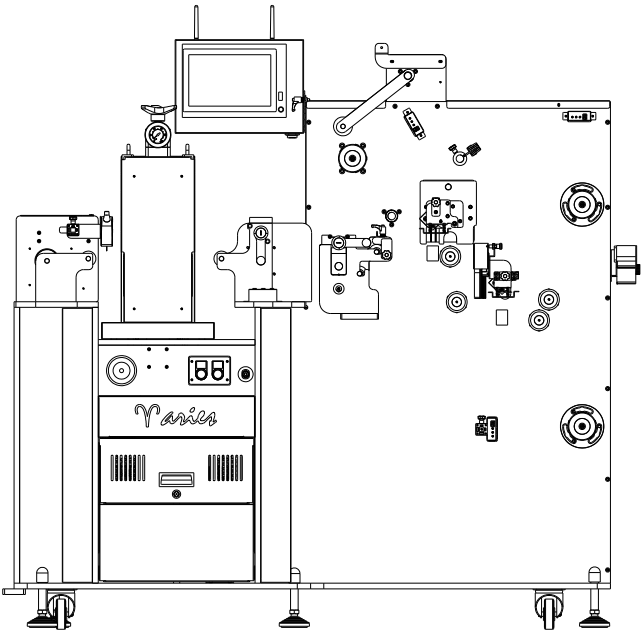

IMPORTANT!

The two modules are properly leveled and aligned together for correct operation.
DO NOT move the unit by yourself or you might compromise the working operation. Please contact Technical Support before taking any action.

UNWINDER MODULE

This module is used to load the your unprinted or printed roll of media and uses pneumatic shafts to secure the roll in place.

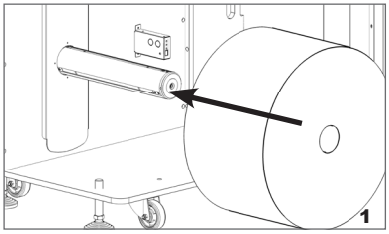

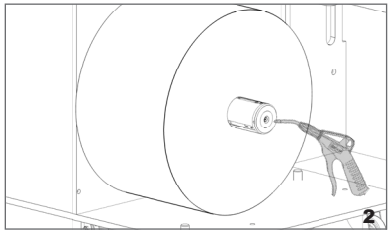

Load the input media roll onto the core holder and use the air gun to expand the pneumatic core in order to secure the roll in place.

Each core holder is managed by its own controller designed to set the required media tension. The unit does a great job keeping that tension constant even if the roll diameter varies during the job.

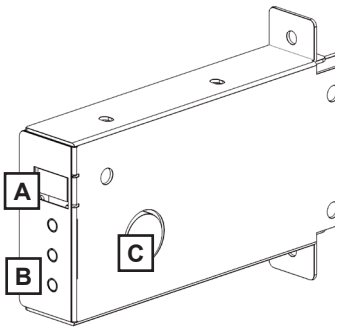

A) Display
B) **ON/OFF** : activate/deactivate the tension control
+ : increase the media tension
- : decrease the media tension
C) Laser sensor

Display conditions:
- flashing O - F - F = the controller is deactivated
- flashing number = the controller is active and it shows the tension level set

Press and hold “run” will allow the core to spin

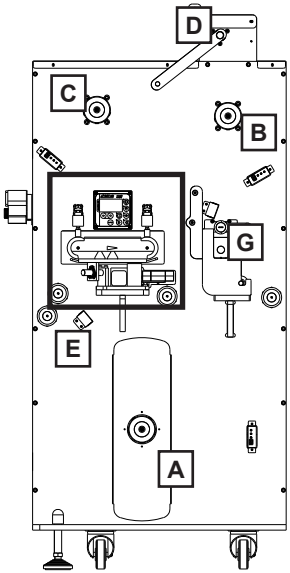

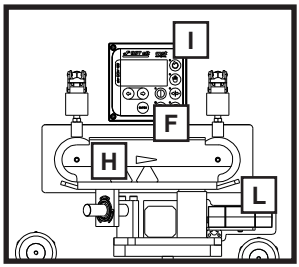

This module offers the opportunity to apply adhesive using the cold self-wound method or with liner lamination.

A) Core holder designated to load the input media roll.

B) Core holder designated to load the lamination roll.

C) Core holder designated to rewind the lamination's liner.

D) Silencer accessory used to drastically reduce the noise generated during the application of noisy self-wound lamination roll.

E) Media sensor used to stop the unit when the media runs out.

F) Splice Table Joins the finished roll to the newly installed roll effortlessly; it helps reduce time and media waste when swapping to a new roll.

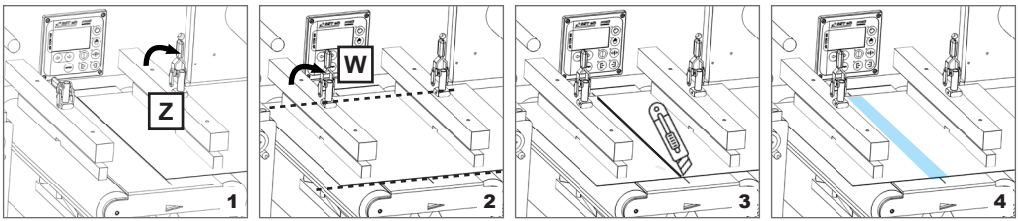

1. Clamp (Z) is used to secure the bracket down over the media already loaded through the unit
2. Load the new media roll onto the unit, then align it with the old media from the last job. Use clamp (W) to secure the bracket down on the new media.
3. Use a cutter to cut the excess media along the lines.
4. Join both media ends together by applying tape above and underneath the ends. Once complete, release both clamps.

G) Nip Roller This assembly, when in the “closed” locked position, allows the unit to lock and advance the media forward through the system. When the lever is set to “open” position the media is unlocked and able to move freely.

H) Web guide used to keep the media path straight and aligned through the unit.

I) Web guide controller.

L) Web guide sensor.

REMOVE THE SCREW SECURING THE ROTARY MODULE

During the installation remember to remove the security screw (onto unwinder module side) used to block the rotary module and avoid damages during shipping.

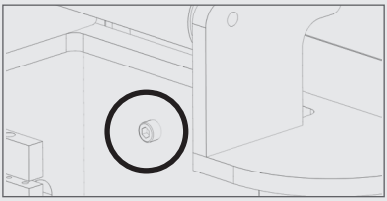

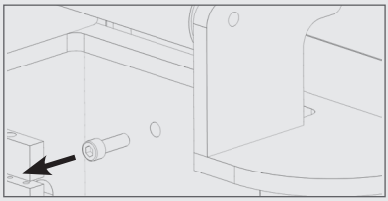

WEB GUIDE

In automatic mode, the edge sensor detects the current position (actual position) of the material web and transmits the respective information to the integrated controller.

The controller compares the actual recorded position against the default position.
The controller will send a relevant correction signal to the actuator if a deviation is found to exist between the two values.

The actuator pivots the movable pivoting frame suspended on the housing of the compact web guide control around a rotating point in the material web infeed until the material web is located back in its default position at the outfeed.

REMOTE CONNECTION

The device is equipped with integrated Wi-Fi connection and can (with operator authorization), be connected remotely through TeamViewer desktop remote access application to perform remote technical support.

ROTARY & REWINDER MODULE

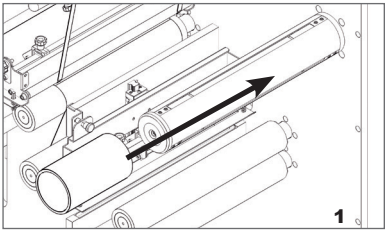

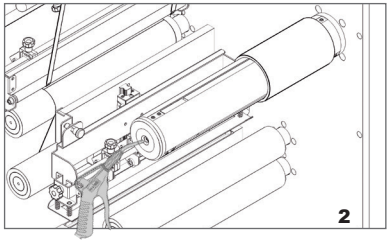

Load the empty cardboard on to the core holder and using the air gun, expand the pneumatic core to fix the roll in place.

Each core holder is managed by its own controller designed to set the required media tension. The unit does a great job keeping that tension constant even if the roll diameter varies during the job.

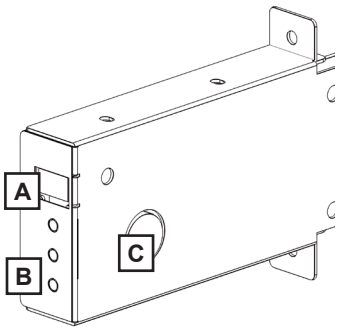

A) Display
B) **ON/OFF** : activate/deactivate the tension control
+ : increase the media tension
- : decrease the media tension
C) Laser sensor

Display conditions:
- flashing O - F - F = the controller is deactivated
- flashing number = the controller is active and it shows the tension level set

Press and hold "run" will allow the core to spin

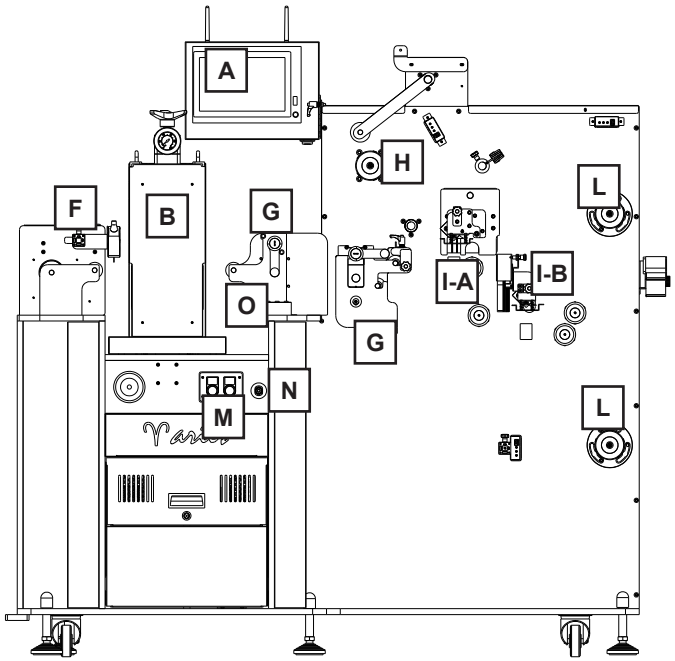

A) Integrated touchscreen PC with the ARS2xxx cutting software manager installed, as a user-friendly application developed to manage the cutting process.

B) Semi-Rotary module.

C) Ready light that indicates that the unit is ON.

D) Power OFF button.

E) Power ON button.

F) Mark sensor used to synchronise the cutting position on printed roll.

G) Nip Roller This assembly, when in the “closed” locked position, allows the unit to lock and advance the media forward through the system. When the lever is set to “open” position the media is unlocked and able to move freely.

H) Core holder designated to rewind the removed waste.

I-A) Trims removal module.

I-B) Longitudinal slitter assembly gives you the option to load up to 18 blade holders, during which it splits the input media into trimmed down widths. Each one can be rewound onto its own cardboard core.

The blade holder is equipped with a razor blade (0.2mm thickness). This blade features four shape corners, before having it replaced, it can be rotated on itself up to four times when a cutting side is worn out.

L) Double shaft designated to rewind the finished job. They can work individually or both at the same time.

M) Main ON/OFF Switch.

N) Output for air gun.

O) Offset Adjustment

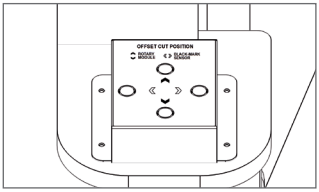

Black arrows
ROTARY MODULE

These buttons move the rotary module along the width of the substrate.

White arrows
BLACK-MARK SENSOR

These buttons move the black mark sensor left or right along the length of the substrate.

!IMPORTANT!

Every time a cardboard core is loaded on to the shaft, remember to activate the controller by setting the tension intensity through the button on it.

MARK SENSOR

The mark sensor synchronizes the cutting position on the printed media through the black mark reading. This device works with default settings. In case of any issue, please reset it following the instructions below.

DEVICE RESETTING

1. Press and hold the + and - push-buttons for 10 seconds.

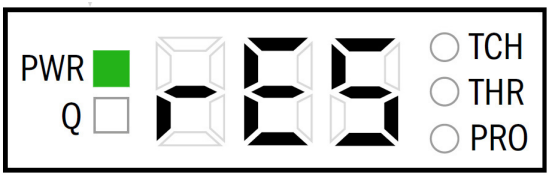

2. The set parameters are reset to the factory settings.

HOW TO CALIBRATE THE MARK SENSOR

1. Press the button “SET” on the sensor. The sign “tch” shall appear.



2. Press again “SET”. The sign “2P” shall appear.



3. Press again “SET”. The sign “1St” shall appear.



4. Now on the ARS25PL software, press the button “FORWARD MEDIA”, and stop once the sensor light is exactly on the mark.

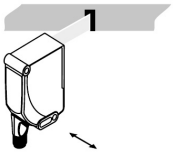

5. Press “SET” again on the sensor. The sign “2nd” shall appear.



6. From the ARS25PL software press “FORWARD MEDIA” until the sensor light is no longer on the mark.

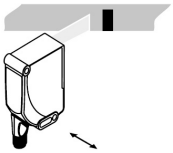

7. Press “SET” again on the sensor.
If the procedure was successful the sensor light will change to red, and it will display a score from 1 to 100 with the quality of the calibration.
If any error occurs, the “Err” sign will be displayed.



61 - 100	☺
31 - 60	😐
1 - 30	☹



SEMI-ROTARY MODULE

The cutting unit is equipped with a magnetic cylinder, to which the cutting die is applied, and an anvil cylinder (counter-pressure cylinder), which acts as a support surface against the cutting edges of the die.

Above the magnetic cylinder, a pressure system allows the contact force between the two cylinders to be adjusted manually by means of two dedicated pressure regulators.

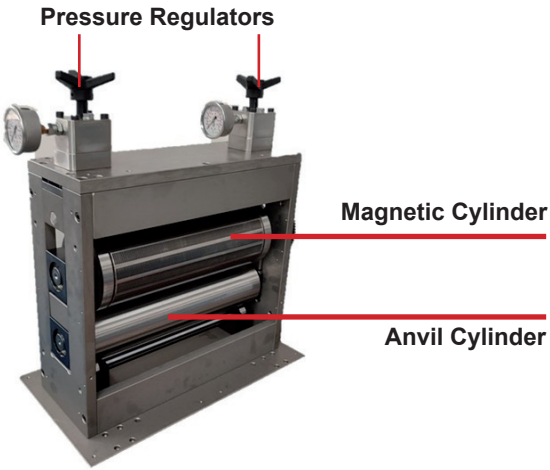

Safety Warnings

!IMPORTANT!

Disconnect the cutting station from the main drive power supply before performing any maintenance or adjustment operations.

The cutting station must not be tampered with or used for operations other than those for which it was designed. In the event of improper use, the manufacturer declines all liability for any resulting damage.
In particular:
• Do not feed paper substrates other than those for which the unit was designed.
• Do not perform any adjustment, cleaning, or maintenance operations while the machine is running.

Cleaning and Routine Maintenance

Cleaning
Keep the cutting station free from any machining residues at all times (adhesive, filaments, ink, chips, etc.). Residues can compromise tolerances and adversely affect system performance.

Lubrication

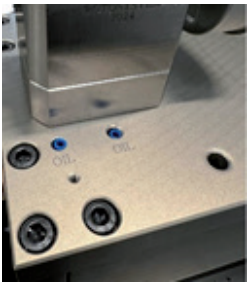

The cutting unit contains oil-impregnated felt pads in contact with the rolling elements. Specifically:
• Two upper thrust rolling elements, positioned above the magnetic cylinder.
• Two lower support rolling elements, positioned beneath the anvil cylinder.

Each rolling element has a corresponding felt pad whose function is to keep the contact surfaces lubricated and protected.

NOTE:
Top up the oil in the dispensers (containing the felt pads) on a daily basis, using Mobil Vactra No. 2 oil.

Working Pressure Adjustment

The cutting unit is fitted with a mechanism that allows the contact pressure between the magnetic cylinder and the anvil cylinder to be adjusted. The two pressure regulators are located on the upper part of the cutting station and are each equipped with an adjustment knob and a pressure indicator.



BEFORE REGOLATION



AFTER REGOLATION

The optimal working pressure values may vary depending on the type of paper substrate being processed and the cutting pattern on the die.

Fine-tune the pressure accordingly for each job.

Adjusting the Pressure
To set the working pressure, tighten both adjustment knobs simultaneously to ensure a parallel descent of the magnetic cylinder, until the oscillation on the pressure indicators can no longer be detected.
If necessary, make small incremental adjustments to optimise the cutting result.

Releasing the Pressure
To disengage the pressure, for dismantling, maintenance operations, or when interrupting the work cycle, gradually loosen both knobs simultaneously until the pressure indicators are fully relieved. When this operation is performed, the magnetic cylinder will automatically slide upwards due to the return springs present in the sliding mechanism.

Gap Adjustment (FOR MODEL ARSx1xxx)

The gap is the distance between the cutting edge of the die and the surface of the anvil cylinder. It must be precisely adjusted according to the type of material being processed and the type of cut required.

The cutting station is equipped with a differential gap adjustment system, independently adjustable on the operator side and on the drive side. Each side has a dedicated adjustment knob and a corresponding numerical indicator.





Clockwise rotation
Indicator numbers increase → Gap decreases → Greater cut depth

Counter-clockwise rotation
Indicator numbers decrease → Gap increases → Shallower cut depth

!IMPORTANT!

Each full revolution of the knob corresponds to a gap variation of 0.01 mm (one graduation on the black scale).

CUTTING MANAGER SOFTWARE

The cutting manager software comes already installed on the touchscreen and it will be used to perform all the operations on ARS2xxx.

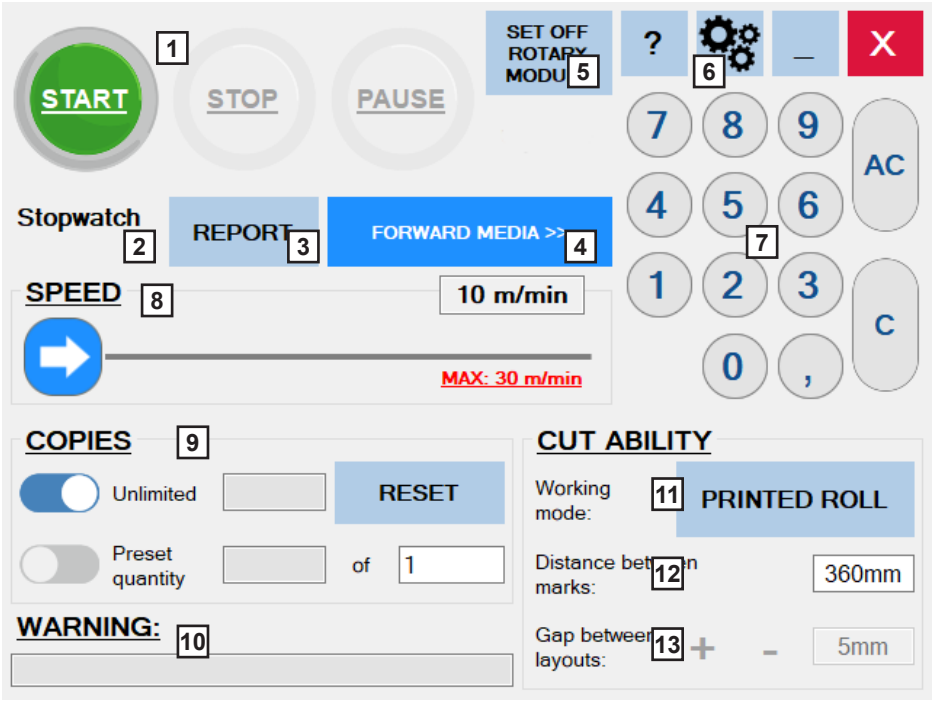

1) Start/stop/pause controls for any job.

2) A stopwatch that shows the expired time at the end of the job.

3) This opens and shows information for each job performed.

4) Forwards the media without cutting.

5) It sets off the whole rotary module, unblocking it to allow the change of die plate.

6) Opens the ***SETTINGS*** window

7) Pad number.

8) Sets the operating speed of the material.

9) Copies
UNLIMITED: Allows the unit to cut until the media roll runs out. Also gives the user an option to ignore the black marker when using printed media.
PRESET QUANTITY: This allows the unit to cut specific number of layouts.

The "***RESET***" button is used to restore the amount of copies done for the current job.

10) Communication box shows warnings to the operator.

11) Choose the working mode
-**PRINTED ROLL**: Cut on a printed roll (in this case the roll has already been made, so the inline printer is not used)
-**UNPRINTED ROLL**: Cut on unprinted material in semi-rotary mode.

12) Working mode:
PRINTED ROLL mode:

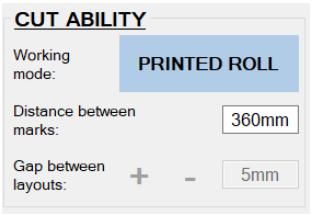

Set the distance between marks.

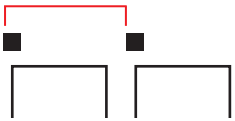

UNPRINTED ROLL mode:

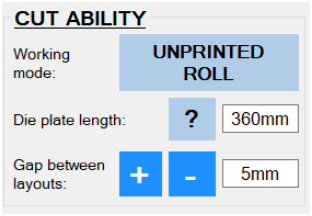

Set the die plate length. The picture gives an example on how to do it (Image below can be checked by clicking "?" button).

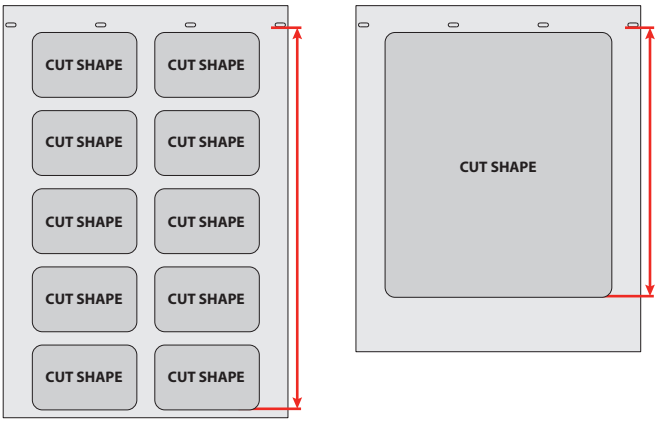

13) Set the distance between each label layout (just on "*unprinted roll mode*").

SETTINGS

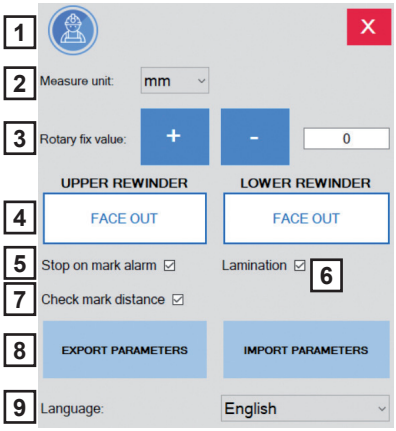

1- Advanced machine options used for maintenance

2- Measure unit: “Choose between mm and inches”.

3- It determines the ratio between the rotation of the rotary, and the advancement of the material.

This can be useful in case the length of the die-cut doesn’t match the one of the printed layout (so in case the ratio is wrong, or the print is distorted).

4- Set the rotating verse for the rewinders, to make rolls with “face out” or “face in” labels”.

5- Stop on mark alarm: “When enabled, the machine stops when the mark is not found”.

6- Set if you are working with or without the lamination roll.

7- When flagged, the machine will run the first layout to measure the distance between the printed marks. If the ‘distance between marks’ set on the user interface does not match the printed distance, the machine will stop.

8- Export/import parameters: Allows end-user to create or load a library with all the job’s parameters.

9- Set the language for the software.

Rotary fix value Demo

Negative Value

VERIFY THE CORRESPONDENCE OF THE CUT WITH THE PRINT.
IF YOU NEED TO STRETCH THE CUT INSERT A NEGATIVE VALUE.

CUTTING DIRECTION

Start

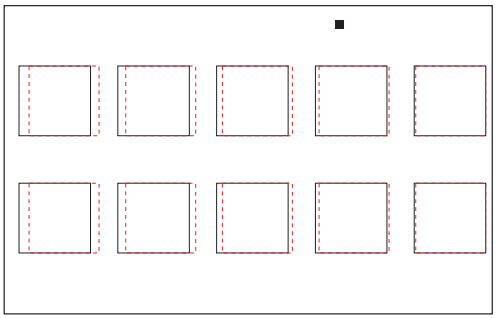

Finish

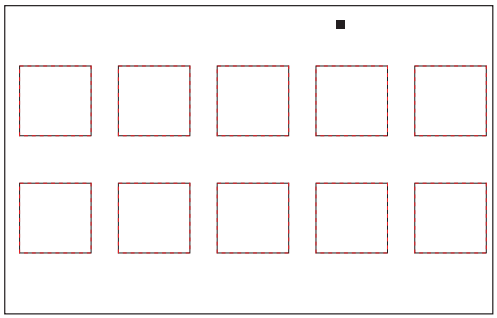

Positive Value

CUTTING DIRECTION

VERIFY THE CORRESPONDENCE OF THE CUT WITH THE PRINT.
IF YOU NEED TO COMPRESS THE CUT INSERT A POSITIVE VALUE.

Start

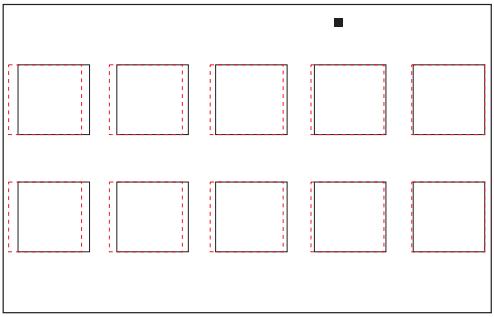

Finish

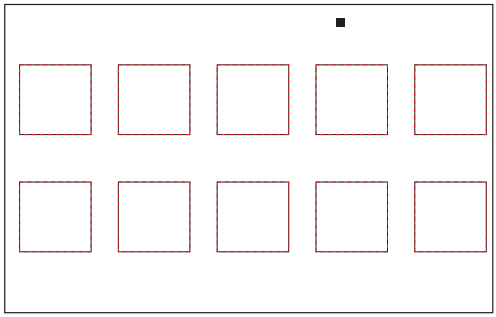

OFFSET ON THE FLY

This feature allows the operator to adjust the offset layout while the unit is working at the minimum working speed only.

Select a preset or custom movement value in millimeters, applied in the direction of the pushed buttons.

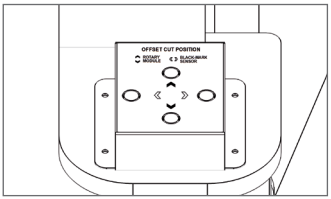

White arrows
BLACK-MARK SENSOR

It moves the rotary module along the width of the substrate.

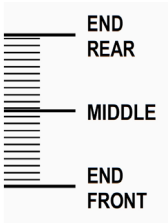

CUT REPORT

This menu shows the report of the jobs run on the device with the opportunity to save/ export it as .txt file.

Moreover, it shows the working hours since the unit has been installed.

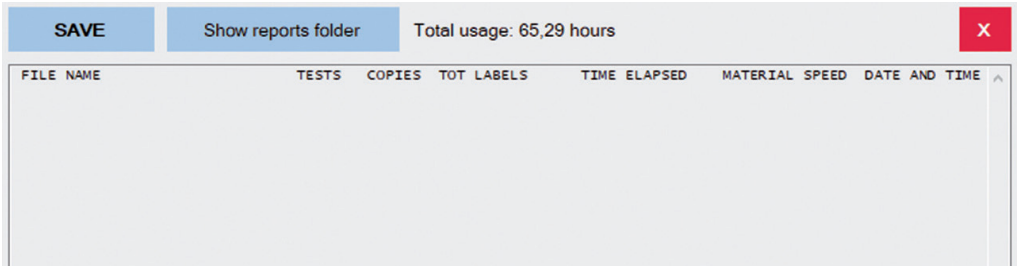

HOW TO SET WEB GUIDE



This panel displays all elements used to manage the system in charge of the web guidance.

Below are the only two buttons used by the operator to switch the operation mode, from “centre positioning” required during the media loading to “automatic” once the media has been properly loaded through the system.

Function	Key	Designation	Description
Operating mode selection		Automatic	Automatic web guiding
		Centre positioning	Centre positioning of the guiding device

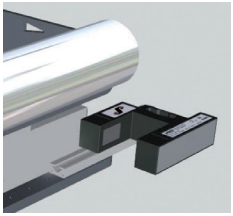

The edge sensor is properly set by the manufacturer, where (2) the centre of the sensor scanning area is aligned to the “zero point” media edge.
Below is the edge sensor status constantly displayed on the control panel, for correct operation, the numeric value (3) should not exceed ± 4.

Operating display edge sensor



Symbol meanings

①	The white triangle marks the set position of the web edge in the sensor scanning area.
②	The dashed line marks the centre of the sensor scanning area.
③	The numeric value indicates the current web edge position in the sensor scanning area (unit mm).

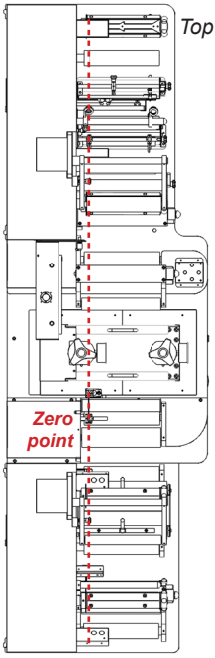

MEDIA LOADING

1. All the core holder controllers must be off.
2. Set the web guide in “centre positioning” operating mode.
3. Fix an empty cardboard core (wide as media width to be used) on to the rewinder.
4. Load the input roll on to the Unwinder Core Holder.

!IMPORTANT!

It is mandatory to place the input media roll against the iron plate. This places the media at zero point.

5. Keeping the nip roller modules open, pass the media through the unit following the diagram showing the media path.
6. Fix the media end to the empty core on to the rewinder core holder.

!IMPORTANT!

It is mandatory to tape the media while the edge is against the iron plate. This guarantees that the media is aligned all throughout the system.

7. Close the nip roller modules.
8. Activate and set the core holders controllers.
9. Push “forward media” on touchscreen to check if the media has been loaded properly and straight.
10. If required, load the lamination. Pay attention to align it in the desired position.
11. Load the job and start the cutting process.
12. Once enough media has been cut, pause the job and peel off the waste and tape it on its dedicated core. Resume the job for a few more copies until the finished labels are rewound on the core.
13. If required, Pause the job to:

Set the back rotary blades to remove the external trims.
Set blade holders to split the input roll on multiple rows.

14. Resume the job.
15. Finally, pause the job and tape each row on to its own cardboard core.
16. Resume the job.

PRINT FILE

Printing file length from 140 to to 360mm.

4x4 black mark is fixed at 140mm from the top of the artwork and 5mm from left side.

Print file includes:
- the graphics
- the black-mark

!IMPORTANT!

The printed input roll must be rewound as shown by the diagram in order to be properly managed by Aries.

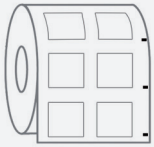

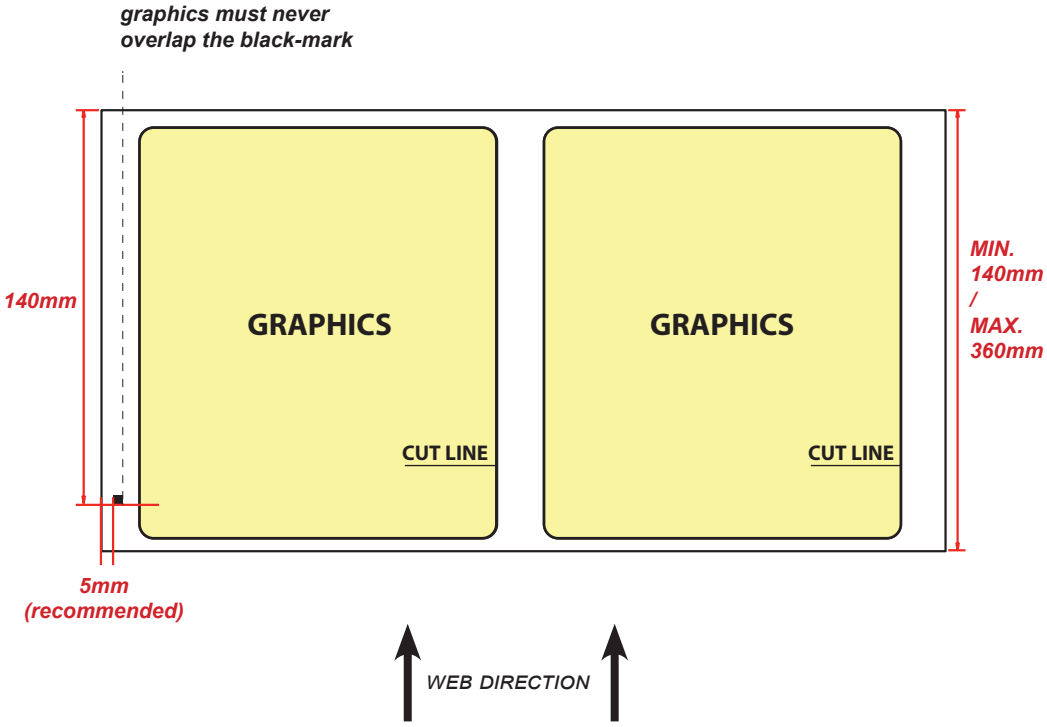

DIE PLATE

Two button holes 3x8mm are mandatory/required.
Die plate width from 140 up to 332mm.
Die plate length from 166 to to 386mm.
Layout placed 4mm from the buttonholes.

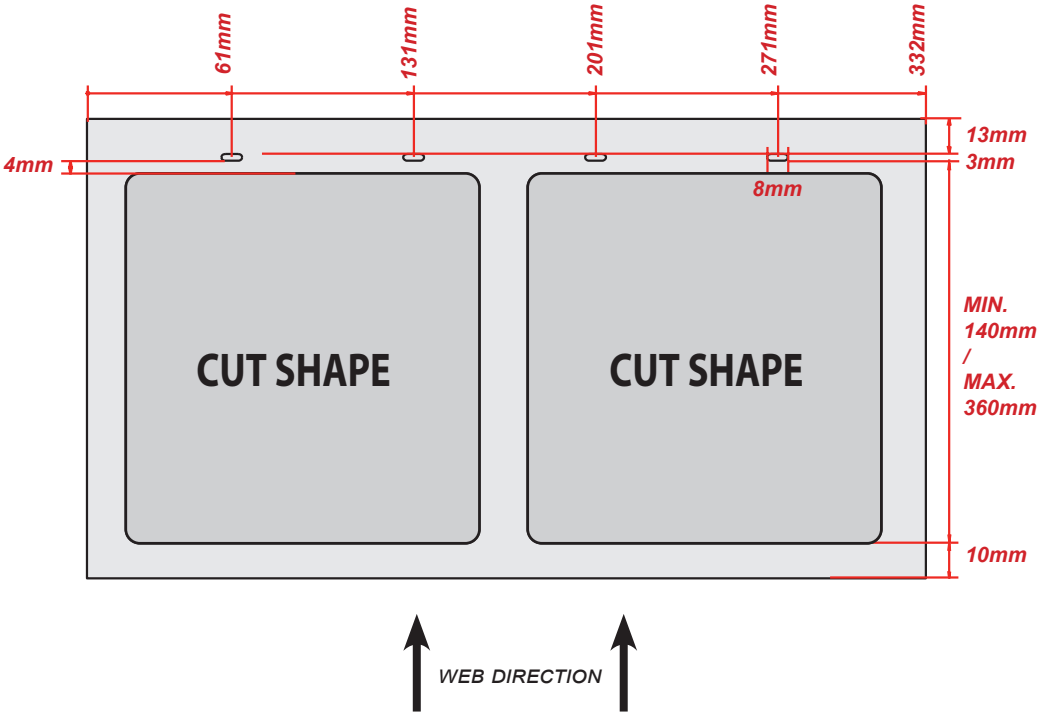

Example of Die plate with two or more shapes.

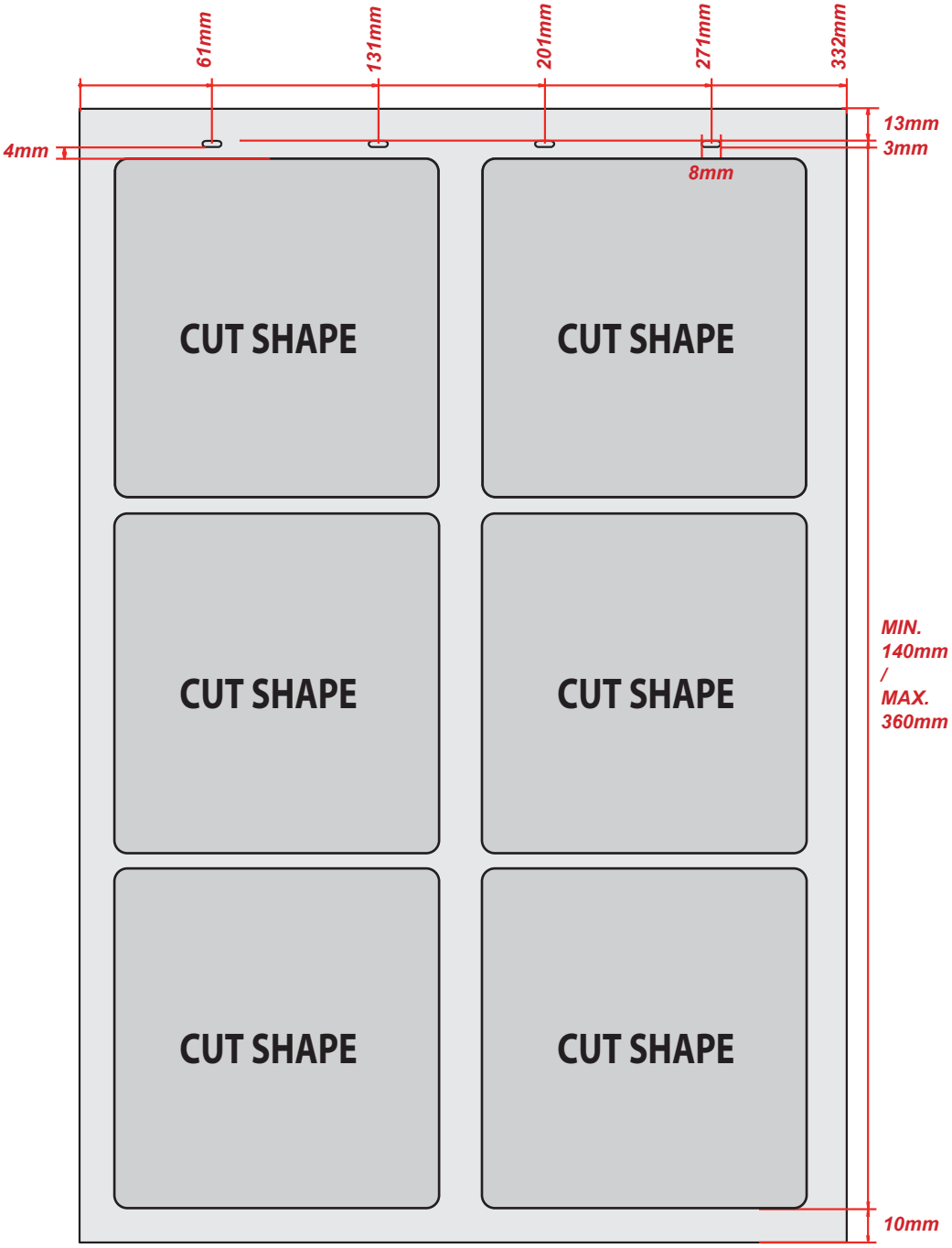

HOW TO CUT BLANK LABELS

1. Select “Unprinted Roll”.
2. Set the gap between each layout.
4. Click “Start” to process the job of unlimited or preset blank labels.

HOW TO INSTALL THE DIE PLATE

1. Open the front plexiglass panel.
2. Fix the die plate with the 4 small holes on to the rotary cylinder.
3. Reinsert the front plexiglass panel.

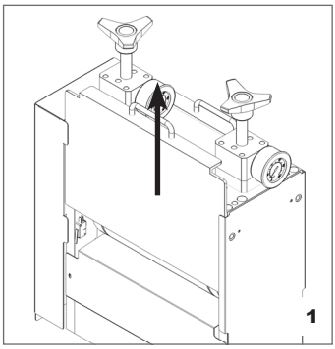

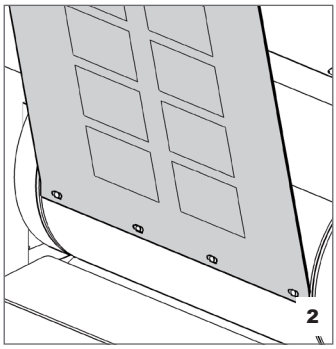

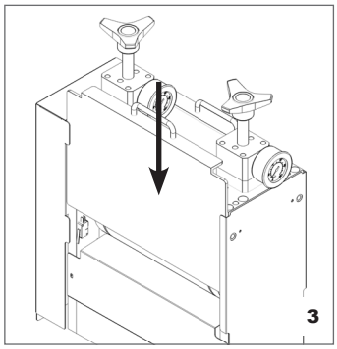

ROTARY CILYNDER

Magnetic cylinder:	18” - Z72 model 1/4
Cylinder development :	457,2 mm
Number of teeth on Gear:	72
Measured Bearer Diameter:	145,53 mm
Measured Body Diameter:	144,57 mm

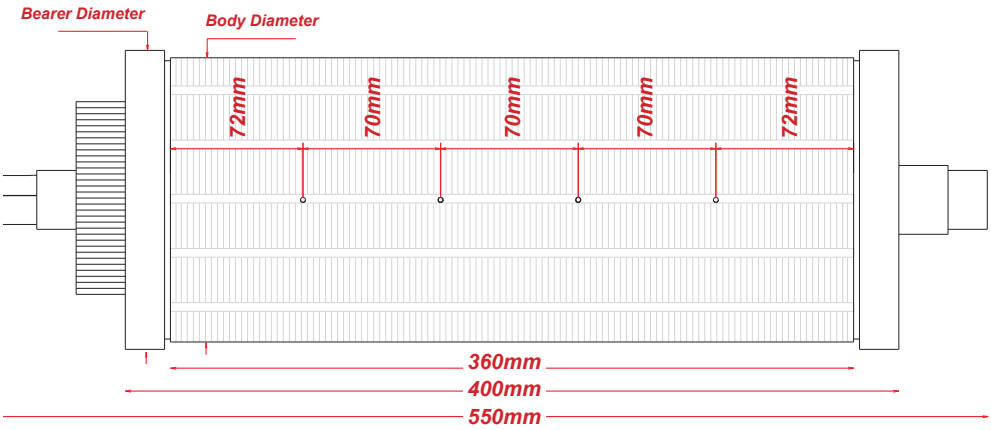

MAINTENANCE INSTRUCTIONS

Keep all moving rollers, the nip rollers, and the magnetic cutting cylinder clean from dust and cutting debris at all times.

It is not recommended to leave the steel sheet mounted on the magnetic cylinder when the machine is not in use. This prevents moisture from forming between the two surfaces and reduces the risk of corrosion.

If the machine is not used for several days, it is recommended to manually lubricate the magnetic cylinder using a cloth and the oil specified above. This prevents moisture from forming between the two surfaces and reduces the risk of corrosion.



!IMPORTANT!

All maintenance operations must be carried out safely, with the machine switched off, and performed only by trained and authorized personnel.



!IMPORTANT!

Clean the unit using alcohol only, do not use chemical agents that might damage the unit.
Do not use blades to remove glue or sticky waste from the roller or any part of the unit.

SAFETY

DO NOT INSERT HANDS INTO THE NIP ROLLERS AND ROTARY MODULES

PAY ATTENTION TO THE SHAFTS WHEN OPERATING